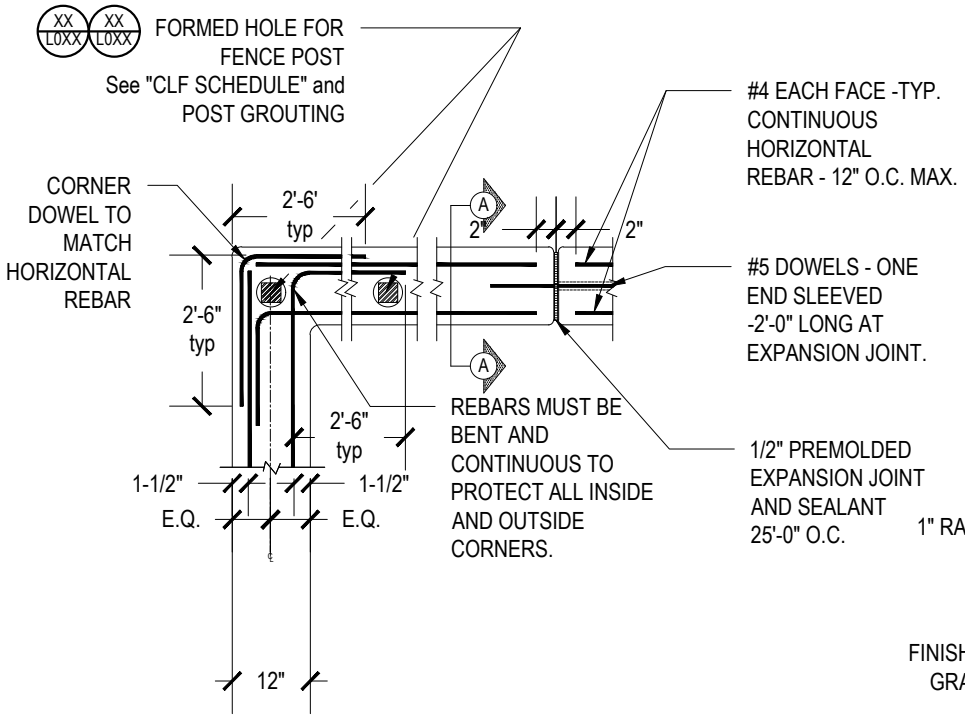

PLAN

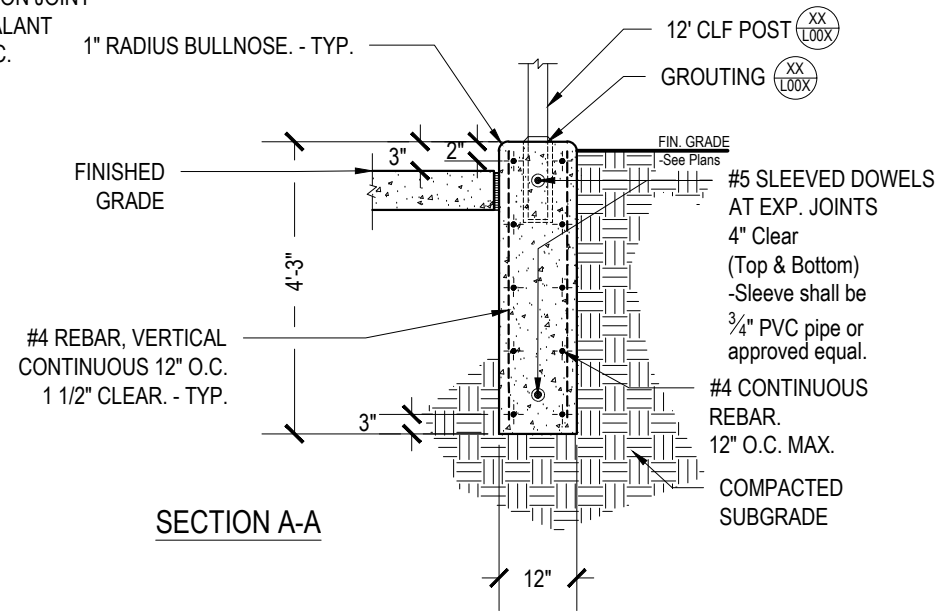

SECTION A-A

NOTE:

1. FENCE POST SHALL BE LOCATED A MINIMUM OF 18" FROM EXPANSION JOINT(S).
2. SEE CLF SCHEDULE XX L00X

Concrete Curb for 12' Chain Link Fence

Not to Scale